ADJUSTABLE DOWNLIGHT / PHILIPS LED MODULE

Flexi

Professional adjustable LED downlight with a multi-faceted aluminium reflector, paired driver and options for control, emergency and high colour rendering.

TECHNICAL DATA
LL-FLEXI-DS
REV 14 / 2025

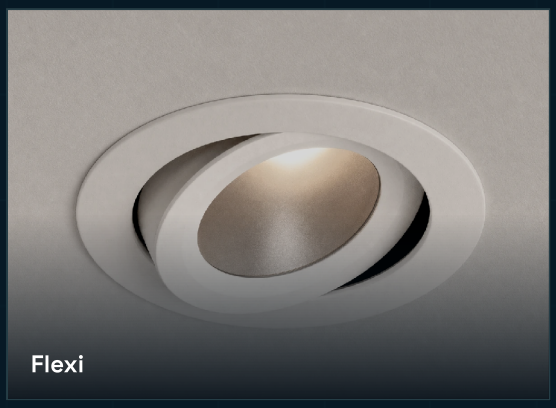

1100-4975 lm	8-40.5 W	L90 >66,000 h	5 years
LUMINAIRE OUTPUT	LUMINAIRE POWER	LUMEN MAINTENANCE	WARRANTY

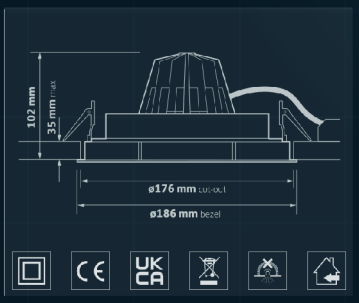

CUT-OUT	BEZEL
176 mm	186 mm

HEIGHT	CEILING THICKNESS
102 mm	35 mm max.

01 Output selection

TEN STANDARD MODEL ENTRIES ARE GROUPED INTO FIVE PAIRED OUTPUT LEVELS.

MODELS	OUTPUT	POWER	LED COLOUR
79.001 - 79.002	1100-1125 lm	8.0 W	3,000K / 4,000K
79.003 - 79.004	1900-1950 lm	13.5 W	3,000K / 4,000K
79.005 - 79.006	2625-2700 lm	19.0 W	3,000K / 4,000K
79.007 - 79.008	3525-3625 lm	27.0 W	3,000K / 4,000K
79.009 - 79.010	4825-4975 lm	40.5 W	3,000K / 4,000K

The model pairs preserve the separate 830 and 840 entries in the governing source ordering table.

02 Configure Flexi

REFLECTOR, CONTROL, COLOUR RENDERING AND EMERGENCY ARRANGEMENTS.

REFLECTOR OPTIONS



/MF25
25 degree multi-faceted

/MF60
60 degree multi-faceted

/SP40
40 degree specular

/SA50
50 degree satin etched

CONTROLS / COLOUR

/T+DALI	Touch dimming or DALI
/BTC	Casambi wireless network including dimming
/R9	High colour rendering module

EMERGENCY / CONSTRUCTION

EMERGENCY	/EM · /EMI · /EMD · /EMDI · /EMS · /EMSI
REFLECTOR	40 degree multi-faceted reflector standard
BUILD	Designed for remanufacturing; white RAL 9010; /BK black RAL 9005

PRODUCT VARIATIONS

Multi-faceted pure aluminium reflector · /MF25 · /MF60 · /SP40 · /SA50 · /R9 high colour rendering · /T+DALI and /BTC control · emergency variants.

DOCUMENT

Technical data
REV 1

OPTICAL CONTROL

40 degree pure aluminium reflector supplied as standard with alternative beam options.

SYSTEM

Philips LED module and paired driver.

INTEGRATION

176 mm cut-out, 186 mm bezel, 102 mm height and 35 mm maximum ceiling thickness.

LIFE / OPTIONS

L90 lumen maintenance over 66,000 hours; high CRI, DALI, wireless and emergency options.

02045 721 554
INFO@LUMENLOOP.CO.UK
LUMENLOOP.CO.UK